Pressure Control Package

DATE: _____

PROJECT: _____

LOCATION: _____

Accessory Data Sheet

Pressure Control for EC Motors

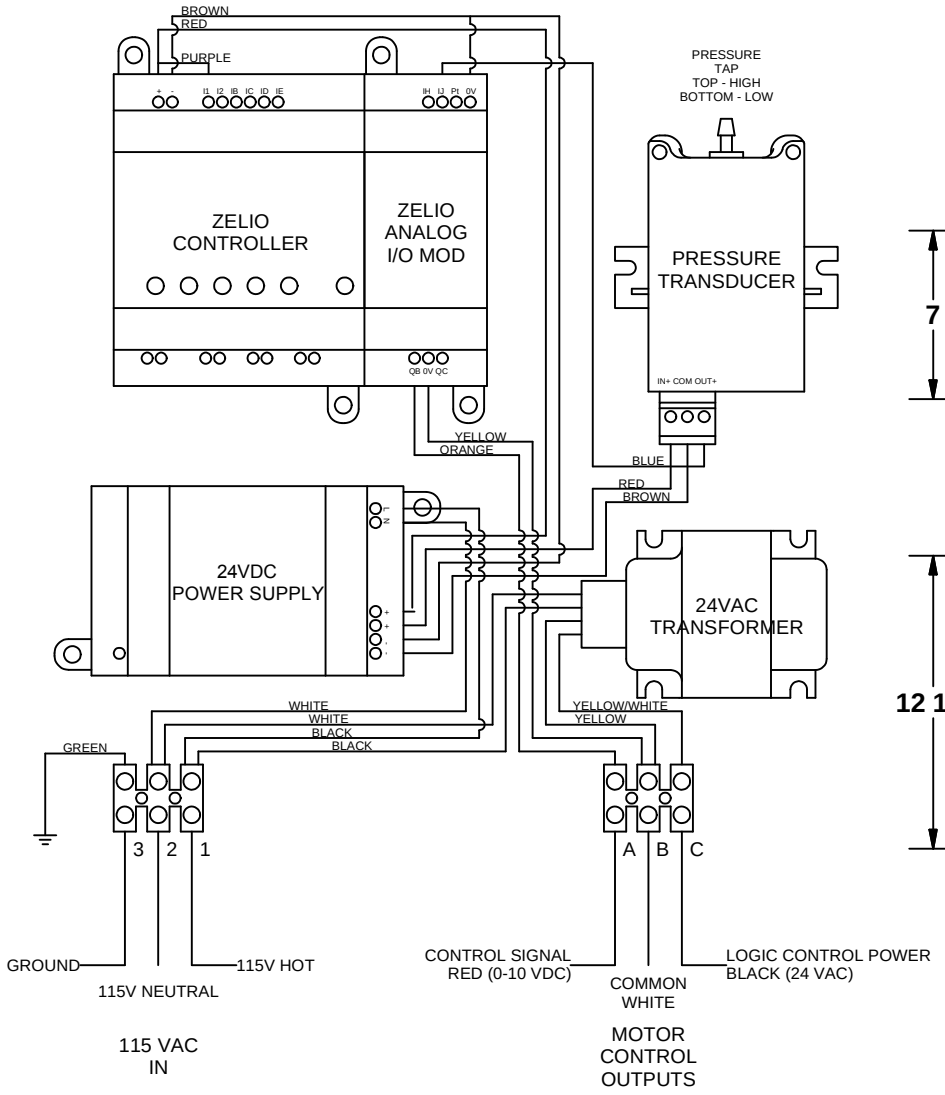

WIRE DIAGRAM

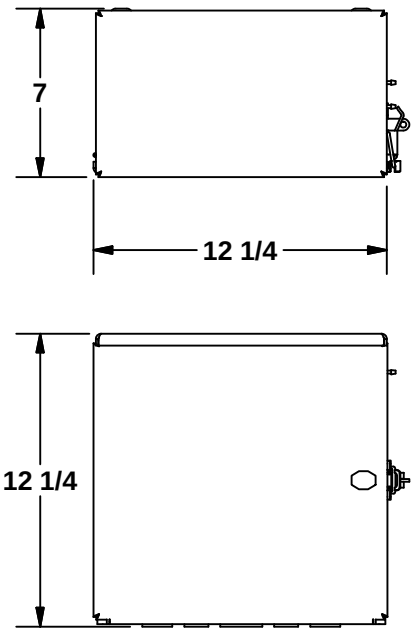

Enclosure

DESCRIPTION:

Constant pressure controller for the Cook EC Motor is for applications where the fan is intended to maintain a near constant pressure in a system such as dryer vents. The pressure controller reads the pressure in a duct system via the provided pressure transducer and automatically adjusts the fan rpm to maintain a preset value. The controller works with the external signal version of the Cook EC Motor and is shipped loose for field installation.