IMH

DATE: _____

PROJECT: _____

LOCATION: _____

Industrial Material Handler
Arangement 1

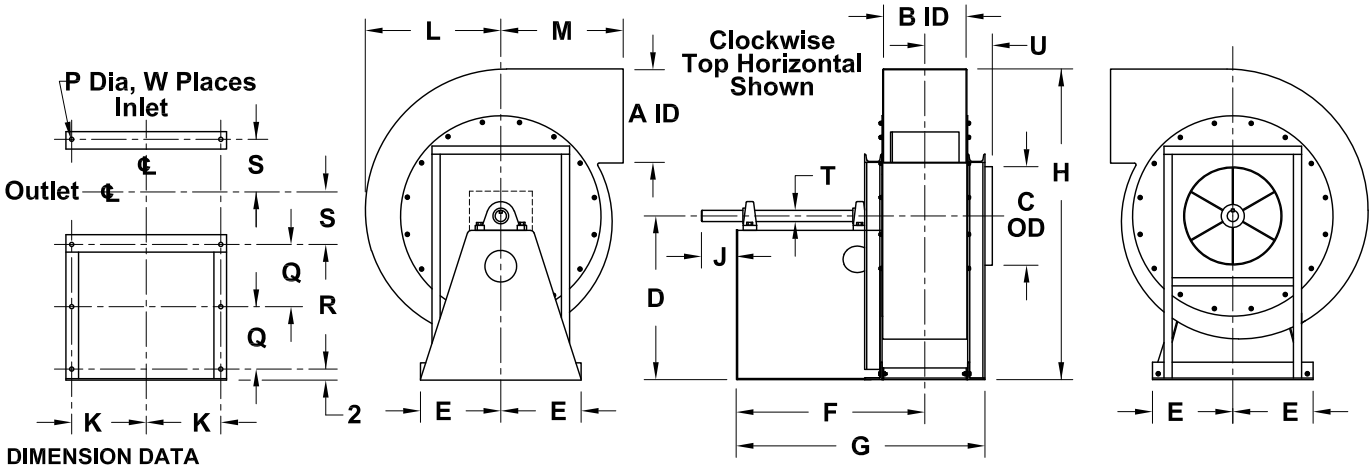

DIMENSION DATA

Size	A	B	C	D	E	F	G	H	J	K	L	M	N	P	Q
70	6-5/8	5-7/8	7	14-1/4	9-11/16	21-1/2	26-9/16	24-13/16	4	9-3/16	9-11/16	8-5/16	10-9/16	9/16	-
90	8-7/16	7-1/2	9	15-1/4	9-11/16	22-5/16	28-3/16	28-3/4	4	9-3/16	12-5/16	10-5/8	13-1/2	9/16	-
110	10-3/8	9-1/8	11	18-3/4	9-11/16	25-1/8	33-1/16	35-3/16	4	9-3/16	15-1/16	13	16-7/16	9/16	8-1/4
130	12-3/16	10-7/8	13	21-3/4	11-3/4	26-1/2	35-1/4	41-3/16	5	11	17-13/16	15-3/8	19-7/16	11/16	8-3/8
150	14-1/16	12-9/16	15	25-1/4	13	32-1/16	41-11/16	47-5/8	5	12-1/4	20-5/8	17-3/4	22-3/8	11/16	10-3/4
170	16	14-1/4	17	28-1/4	13-7/8	32-15/16	43-3/8	53-5/8	6	13-1/8	23-3/4	20-1/8	25-3/8	11/16	10-3/4
190	17-13/16	15-7/8	19	31-1/4	15-5/16	34-7/8	46-1/4	59-1/2	6	14-9/16	25-15/16	22-7/16	28-1/4	11/16	11-3/8
210	19-3/4	17-9/16	21	34-1/2	16-9/16	38-3/4	50-3/4	65-3/4	6	15-13/16	28-1/2	23	31-1/4	11/16	12-3/4
230	21-5/8	19-1/4	23	37-1/2	18-13/16	41-1/4	55-1/2	71-13/16	7	17-9/16	31-1/4	26	34-5/16	13/16	13-7/16
260	24-7/16	21-3/4	26	41-3/4	20-5/8	43-7/16	58-15/16	82-15/16	7	19-3/8	35-1/8	29	41-3/16	13/16	13-7/8
290	27-5/16	24-1/4	29	46-1/2	22-1/2	45-11/16	62-7/16	92-1/2	8	21-1/4	39-1/2	31-3/4	45-7/8	13/16	14-3/8

Size	R	S	T		U	W	X	Y	Z	AA	BB	Ship Wt. +++	
			SD+	HD++								Std Duty	Heavy Duty
70	14-7/8	4-15/32	1-3/16	1-7/16	6-3/16	6	10-1/8	9-1/4	13-3/8	8-13/16	8-3/8	239	275
90	14-7/8	5-9/32	1-7/16	1-11/16	7	6	12-15/16	11-3/4	17-1/16	11-3/16	10-5/8	318	366
110	16-1/2	6-19/32	1-7/16	1-15/16	8-13/16	8	15-3/4	14-7/16	20-13/16	13-3/4	13-1/16	424	488
130	16-3/4	7-17/32	1-11/16	2-3/16	9-13/16	8	18-5/8	17	24-5/8	16-3/16	15-3/8	558	642
150	21-1/2	8-3/8	1-15/16	2-7/16	10-11/16	8	21-1/2	19-3/4	28-3/8	18-7/8	18	720	828
170	21-1/2	9-7/32	2-3/16	2-7/16	11-1/2	8	24-9/16	22-1/2	32-3/16	21-1/4	20-1/4	910	1046
190	22-3/4	10-1/32	2-7/16	2-15/16	12-5/16	8	27-1/8	24-7/8	35-13/16	23-3/4	22-5/8	1127	1296
210	25-1/2	10-7/8	2-7/16	2-15/16	13-3/16	8	29-7/8	27-1/8	38-3/8	25-3/4	24-3/8	1372	1578
230	26-7/8	12-7/16	2-11/16	3-7/16	15-1/8	8	32-13/16	29-13/16	42-5/8	28-5/16	26-13/16	1645	1892
260	27-3/4	13-11/16	2-11/16	3-7/16	16-3/8	8	38-3/16	33-1/2	49-5/8	31-7/8	30-1/4	2107	2423
290	28-3/4	14-15/16	2-15/16	3-7/16	17-5/8	8	42-11/16	37-5/8	54-7/8	35-3/4	33-7/8	2630	3025

ALL DIMENSIONS IN INCHES. WEIGHTS IN LBS., +STANDARD DUTY, ++HEAVY DUTY. +++ SHIPPING WEIGHT BASED ON MH WHEEL.

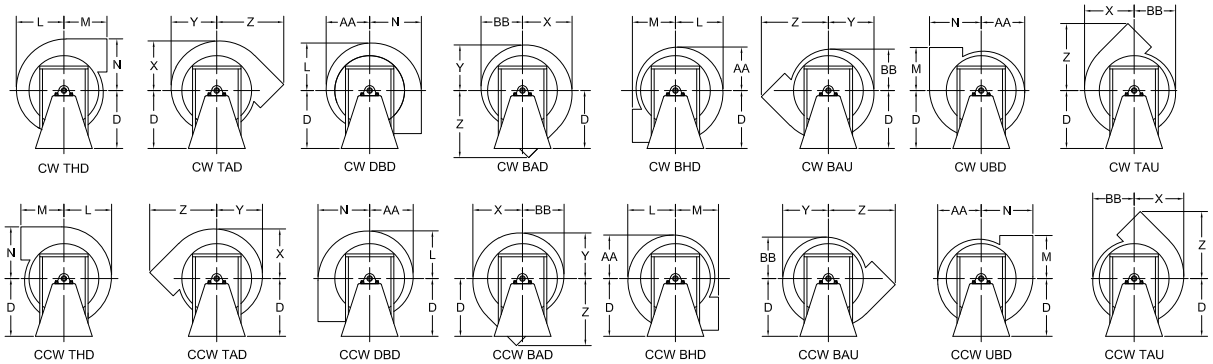

IF005R02